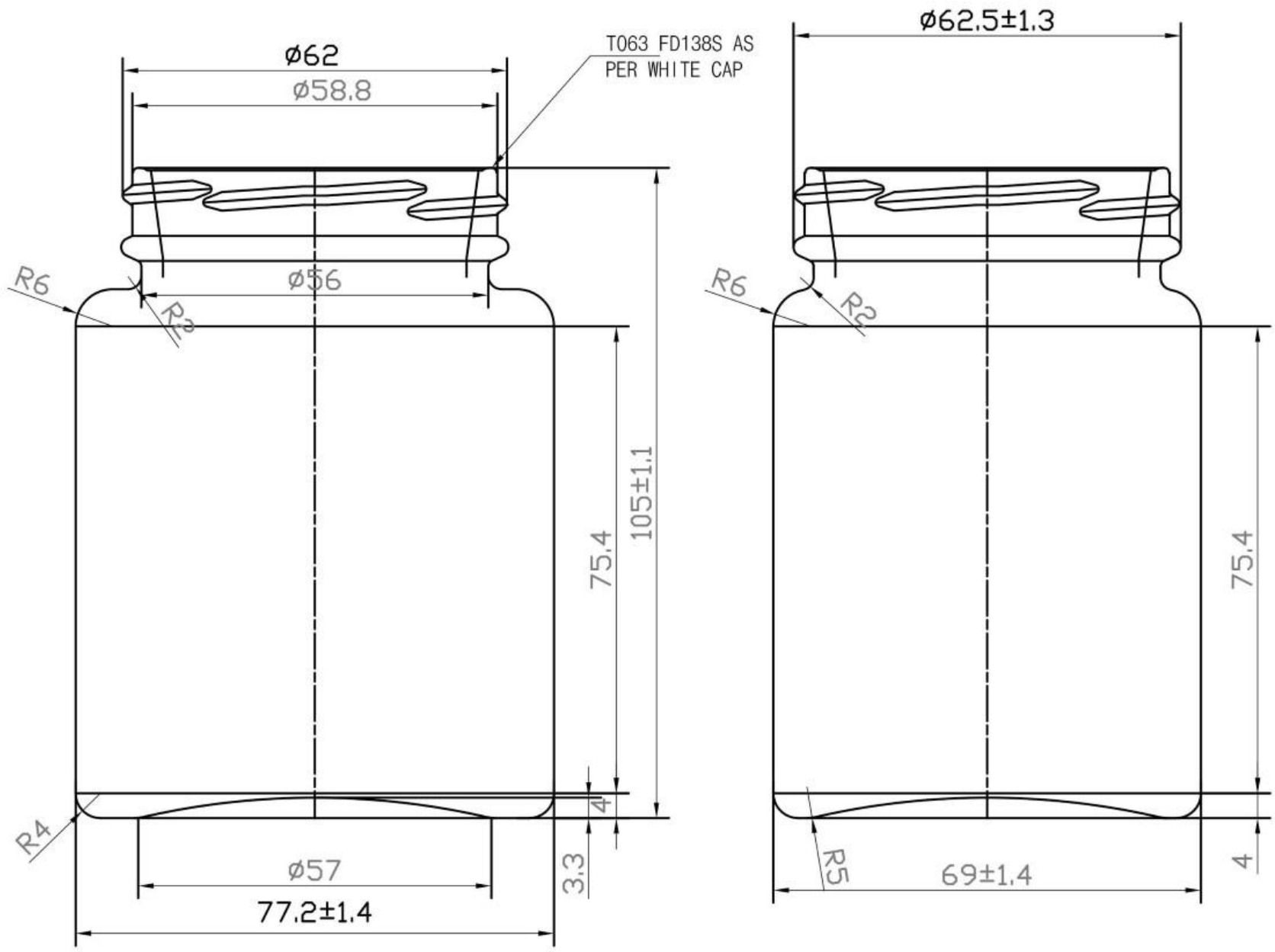

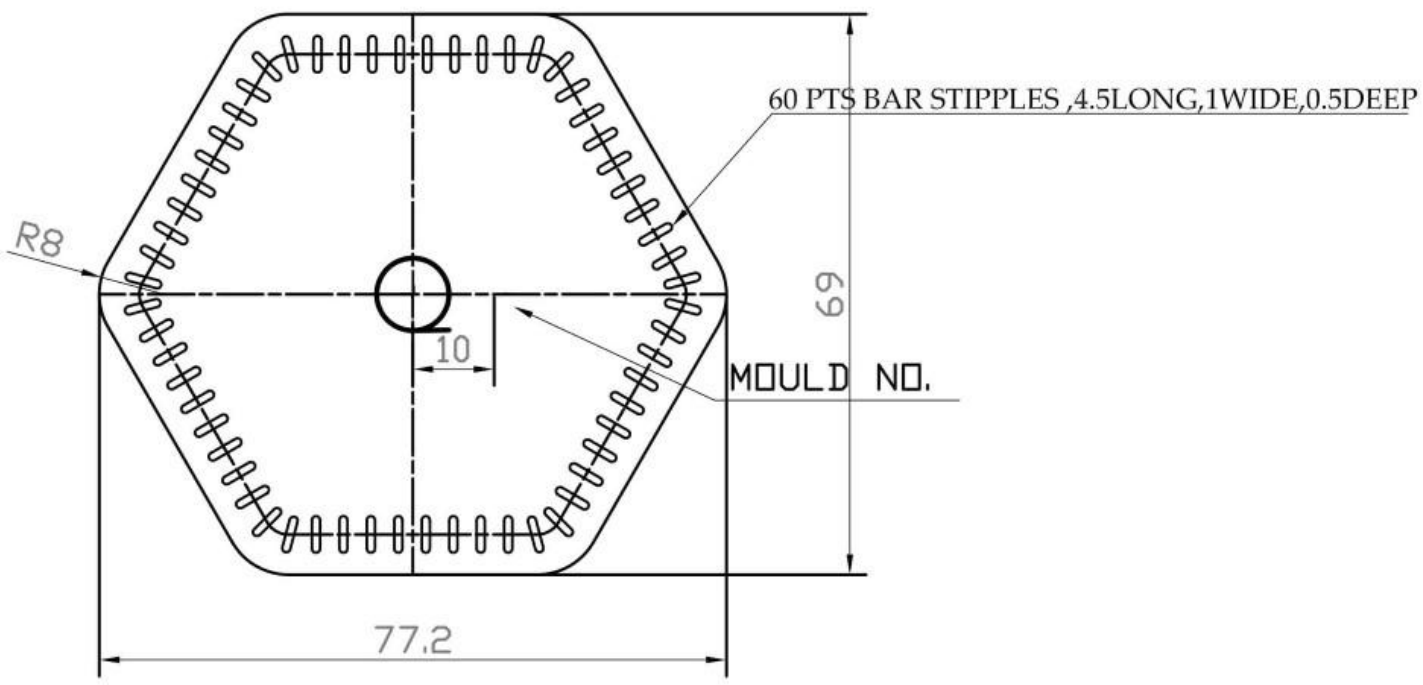

CUSTOMER APPROVAL : - - - - - - - - - - - -

DATE : - - - - - - - - -

PROCESS	DG-PB						
MINIMUM THROUGH BORE	N.A						
VACUITY	N.A						
GLASS COLOR	FLINT						
MAXIMUM DEPTH OF STANDARD ENGRAVING	N.A	No.	REV. No.	REVISION	DATE	REV.BY	
MAX. GAS VOLUMES	N.A	FILL-POINT CAP.		– – – – – –			
REF.DRG No. EXIST BB DESIGN		BRIMFUL CAP.		290 ± 6 ml			
PLANT		WEIGHT		260 g			
1 2		FINISH		T0-63 FD138S AS PER WHITE CAP			
		SURFACE TREATMENT		YES			

PRODUCT DESIGN / R&D

PRODUCT NAME	290ml jar	
CUSTOMER :		
DRAWN BY:	DATE :	CHECKED :
APPROVED BY:	COLOR	
SCALE	DRAWING No.	A4
NTS		Rev. 00